ENGINE, THROTTLE PEDAL - Z26SPD92AN/AH/BN/BH (C750081)

2026 RZR - RZR PRO S ULTIMATE (R01) - Z26SPD92AN/AH/BN/BH

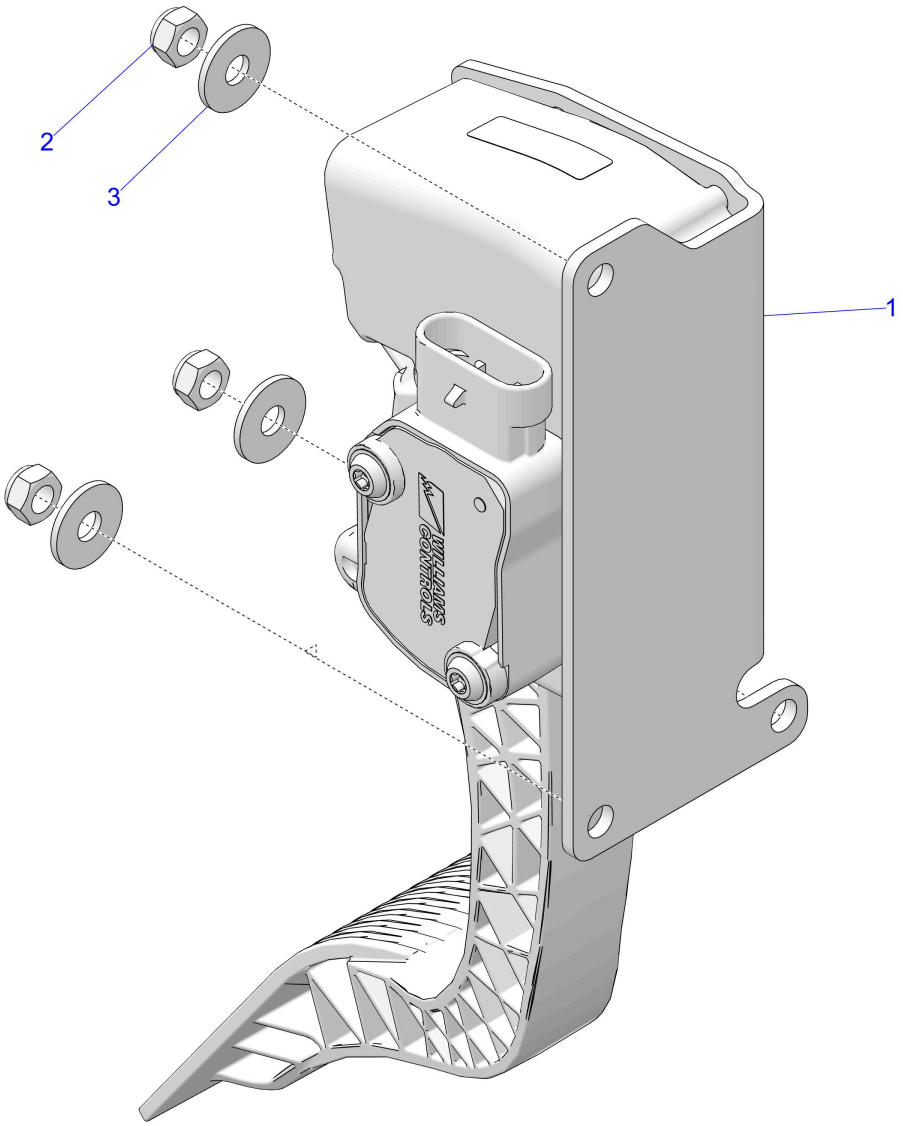

© 2023 Polaris Industries Inc.

C750081

Reference #	*Part#*	*Description*	*Quantity*
1	4080147	PEDAL-ELECTRONIC THROTTLE	1
2	7546703	NUT-6MM X 1 NYLOK-Z	3
3	7556565	WASHER-6.4X18.0X1.6 ZC	3

Copyright 1996-2026 Polaris Industries U.S.A All rights reserved.